MEC0160

1/23 manual gear on cart + MEC132 kit

Supplementary products
• Handle: MEC0203 • Screwer kit: MEC0132

Description
Non reversible transmission under load
Sealed assembly on bearings in a white powder-coated aluminium casing with top-up greaser
Stainless steel drive shaft
Galvanised sheet metal cart with leak tight guide bearings
Possibility of assembly on Ø32 and Ø34 tube

Specifications	
Gear	1/23rd
Operation	18v screwer at 400 rpm MAX
Aluminium Ø60 tube max. double rolling length	30m
Ø32 tube max. double rolling length	100m
Input torque	10Nm
Output torque	80Nm
Weight	4Kg

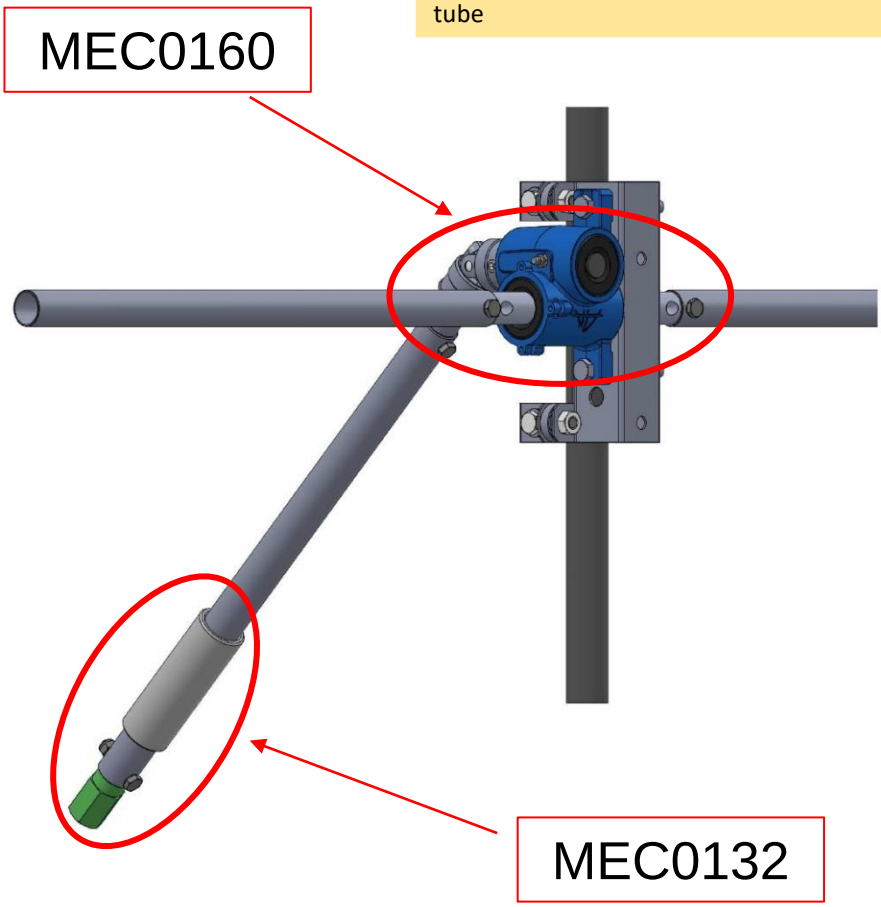

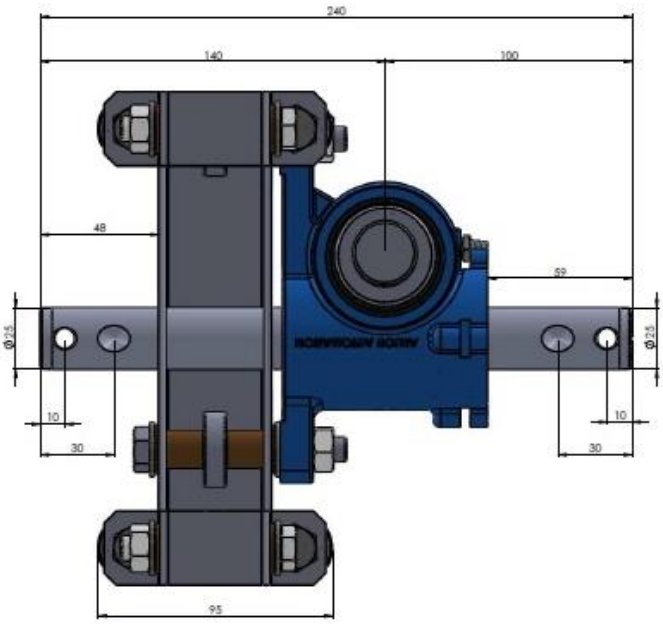

MEC0160

880 rue Léo Baekeland
85290 Mortagne sur Sèvre- France
+33 (0)2 02 51 63 02
contact@anjouautomation.fr

Anjou Automation
L'innovation est notre culture